Bun Foot B

LEG SYSTEM CONFIGURATIONS

1.5" Diameter Tubing

Specifications shown below represent standard sizes only.
Palmer Leg Systems are custom built to ANY dimensions.

Download DXF Drawing File

1-LEG

Model:
B150

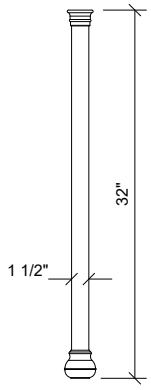

2-LEG

Models:
LS2B
with rear risers

LS2BNR
no rear risers

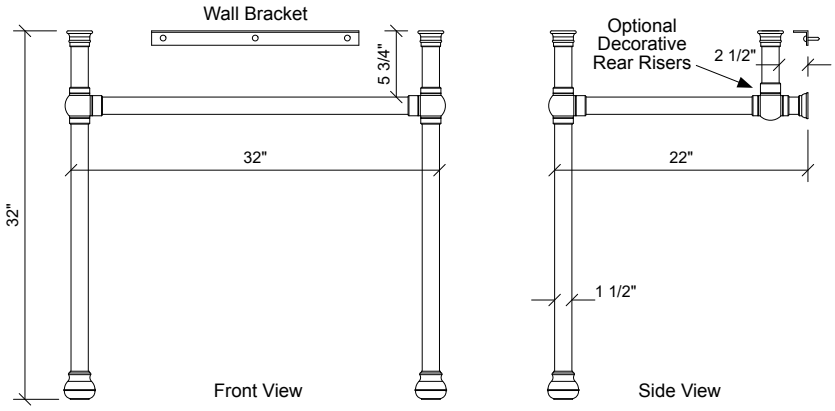

3-LEG

Models:
LS3B
with rear risers

LS3BNR
no rear risers

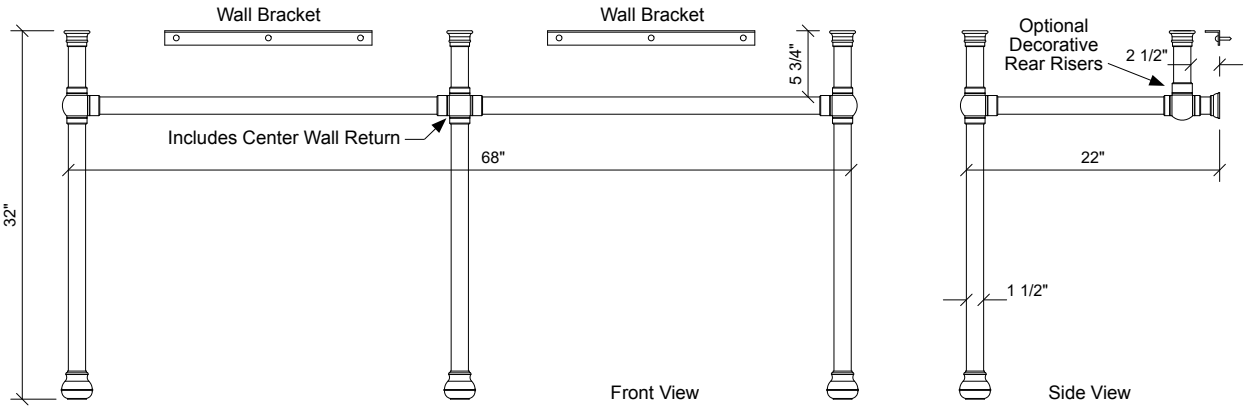

4-LEG

Model:
LS4B

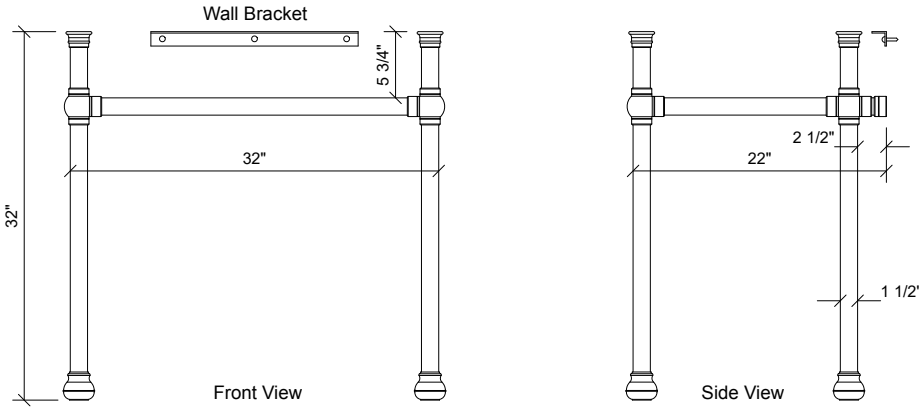

5-LEG

Model:
LS5B

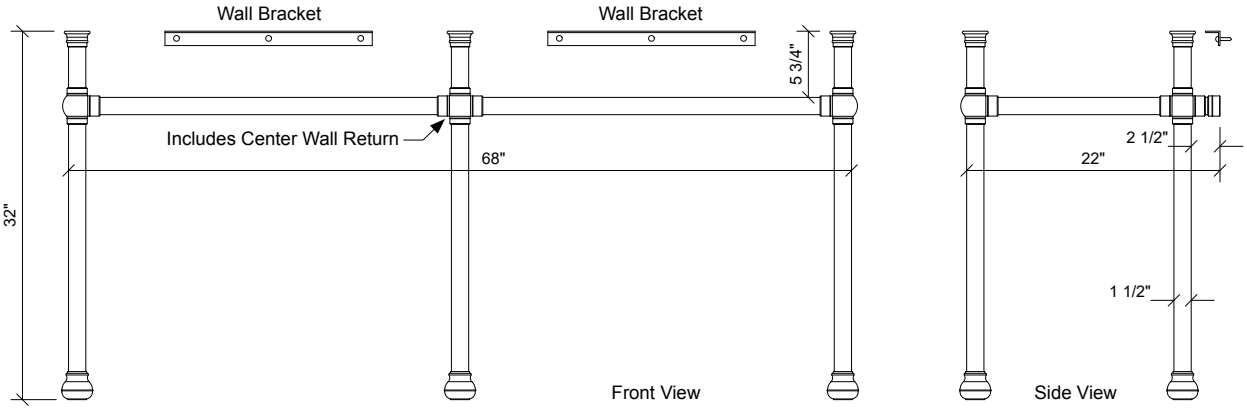

© 2020 Palmer Industries, Inc.